Wiring Diagram:
Immersion Heater Control using Relay Box and Horstmann Unit

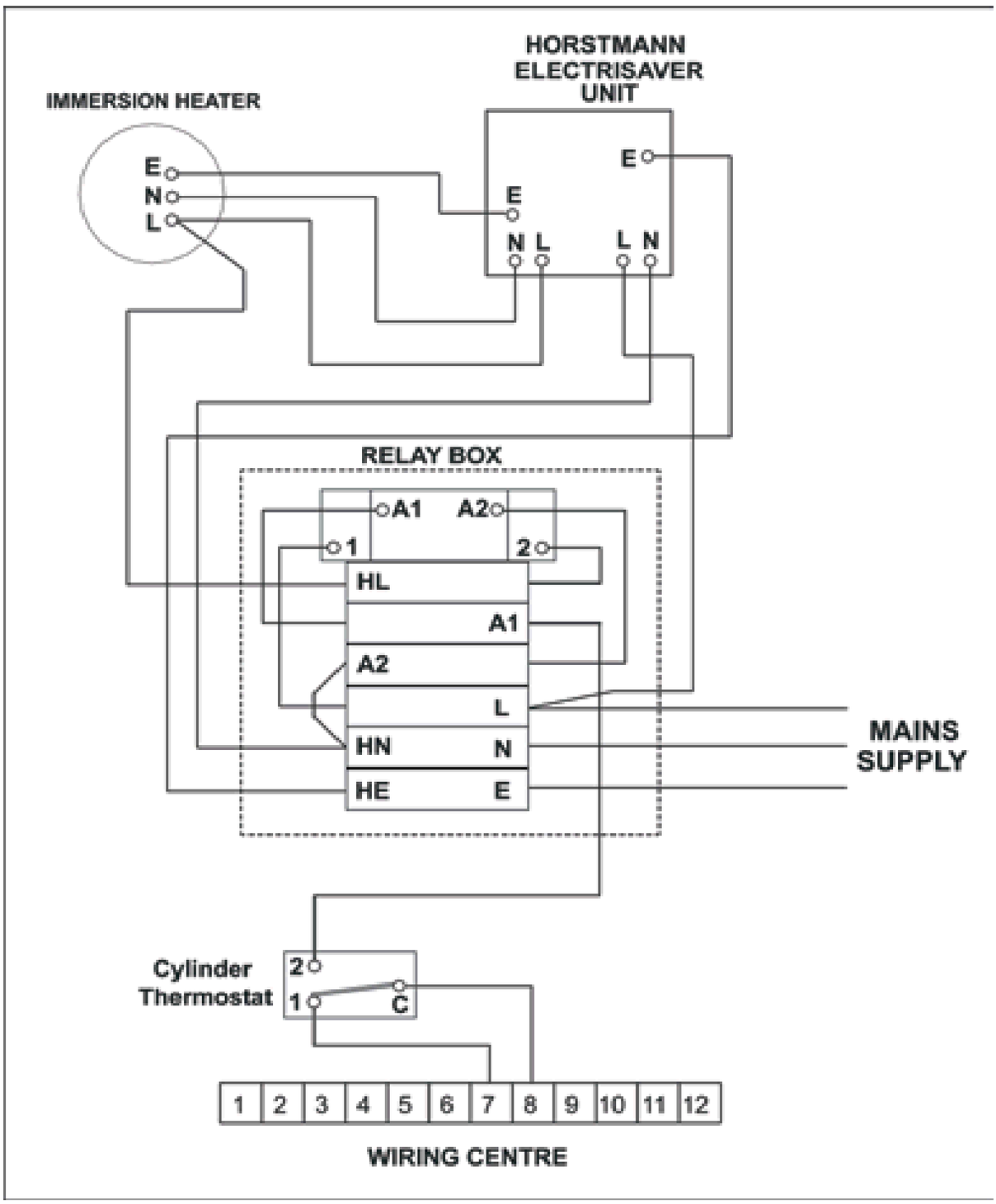

HeatKing, A division of TEV Limited.
Armytage Road, Brighouse, West Yorkshire, HD6 1QF, UK.
T: +44 (0) 1484 405680 F: +44 (0) 870 606 4862 E: sales@heatking.co.uk W: www.heatking.co.uk

Part No: 70408706-01 Updated on 20.06..09